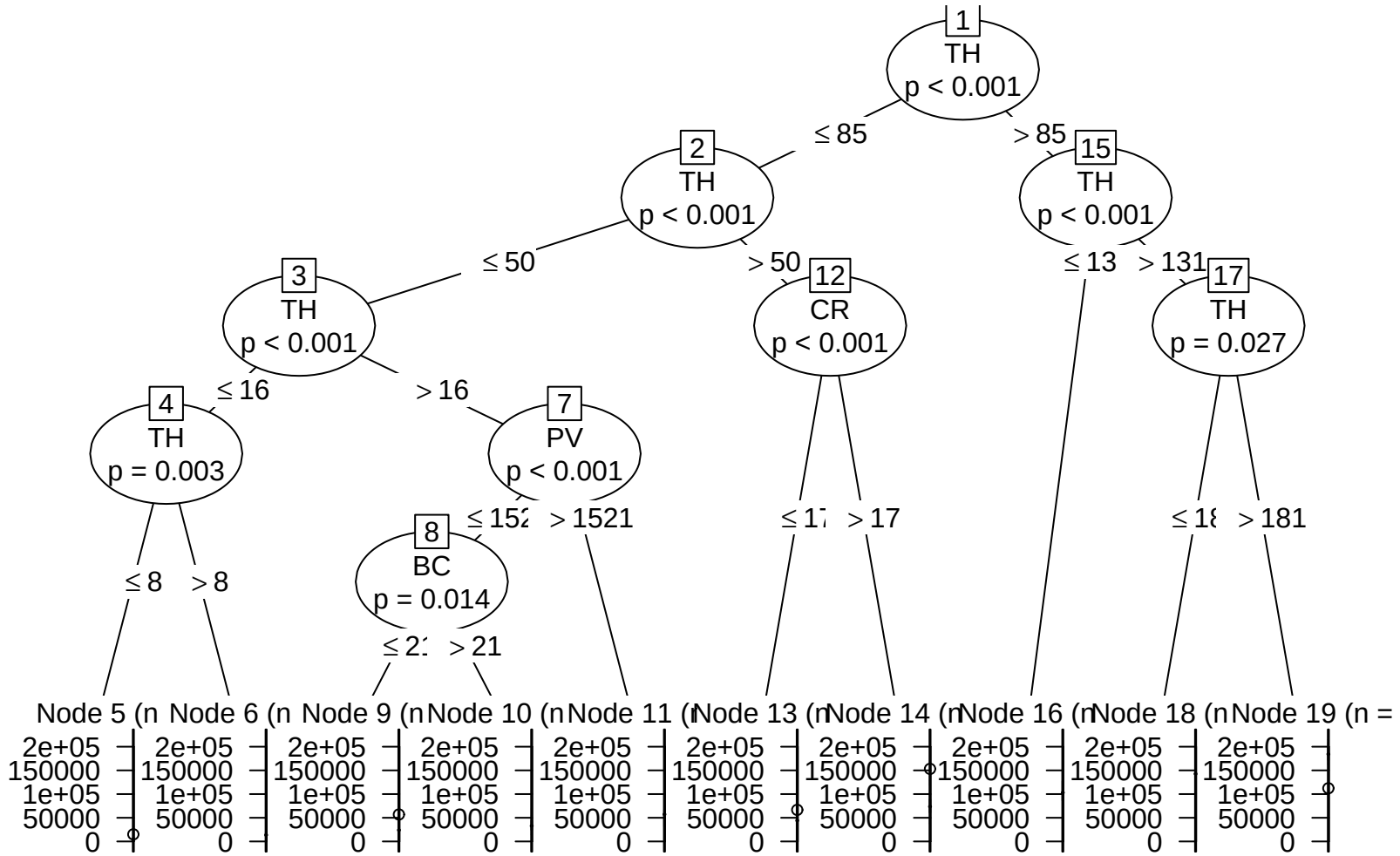
1
TH
p < 0.001
≤ 85
> 85
2
TH
p < 0.001
15
TH
p < 0.001
≤ 50
> 50
≤ 13
> 131
3
TH
p < 0.001
12
CR
p < 0.001
17
TH
p = 0.027
≤ 16
> 16
4
TH
p = 0.003
7
PV
p < 0.001
8
BC
p = 0.014
≤ 8
> 8
> 1521
> 17
> 181
Node 5 (n
Node 6 (n
Node 9 (n
Node 10 (n
Node 11 (n
Node 13 (n
Node 14 (n
Node 16 (n
Node 18 (n
Node 19 (n =
2e+05
150000
1e+05
50000
0