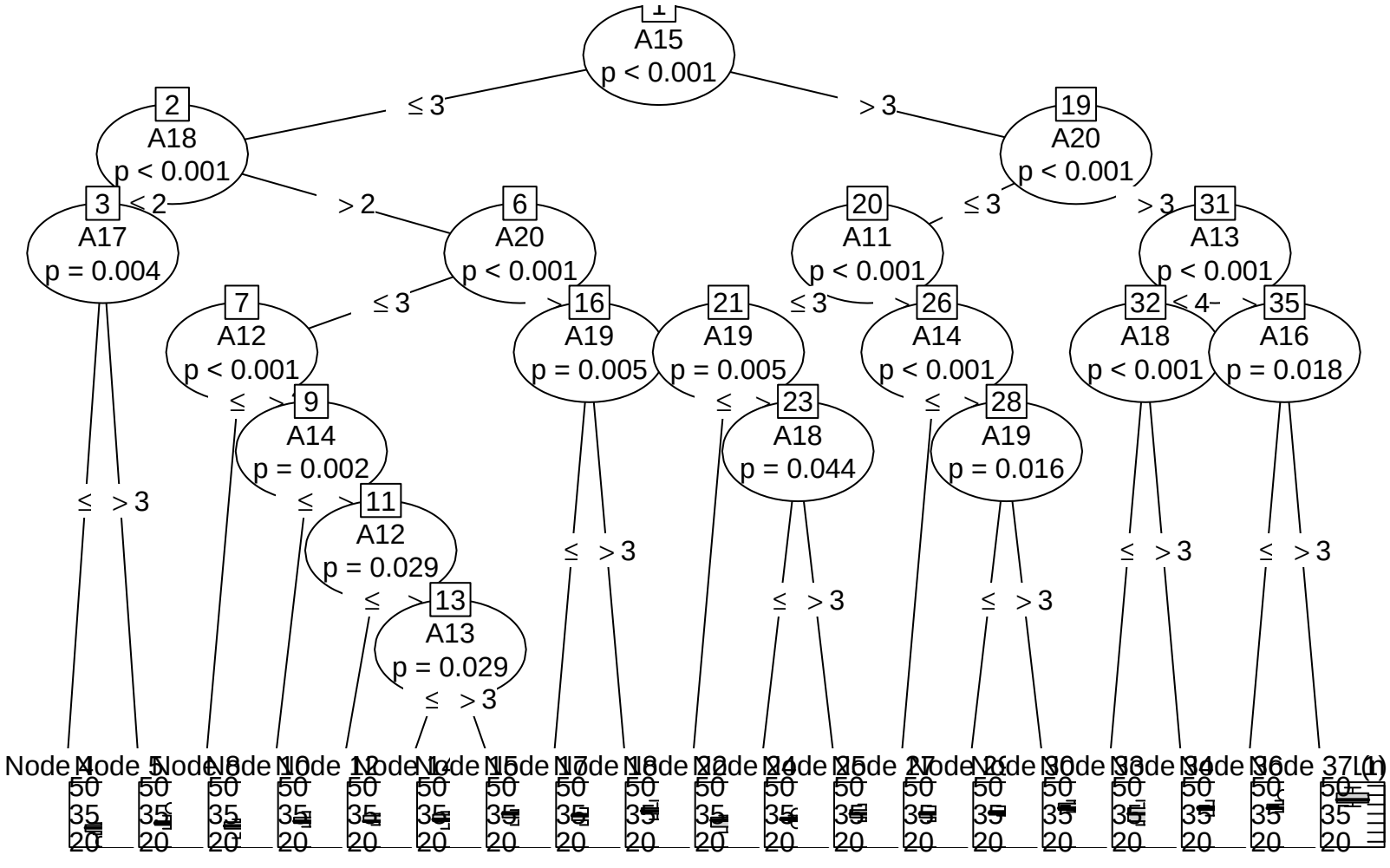
1
A15
p < 0.001
≤ 3
> 3
2
A18
p < 0.001
19
A20
p < 0.001
< 2
> 2
3
A17
p = 0.004
6
A20
p < 0.001
20
A11
p < 0.001
≤ 3
> 3
31
A13
p < 0.001
7
A12
p < 0.001
≤ 3
16
A19
p = 0.005
21
A19
p = 0.005
≤ 3
26
A14
p < 0.001
32
A18
p < 0.001
< 4
35
A16
p = 0.018
9
A14
p = 0.002
23
A18
p = 0.044
28
A19
p = 0.016
11
A12
p = 0.029
13
A13
p = 0.029
≤
> 3
Node 4
Node 5
Node 8
Node 10
Node 12
Node 14
Node 15
Node 17
Node 18
Node 22
Node 24
Node 25
Node 27
Node 28
Node 30
Node 33
Node 34
Node 36
Node 37
(n)
50
35
20