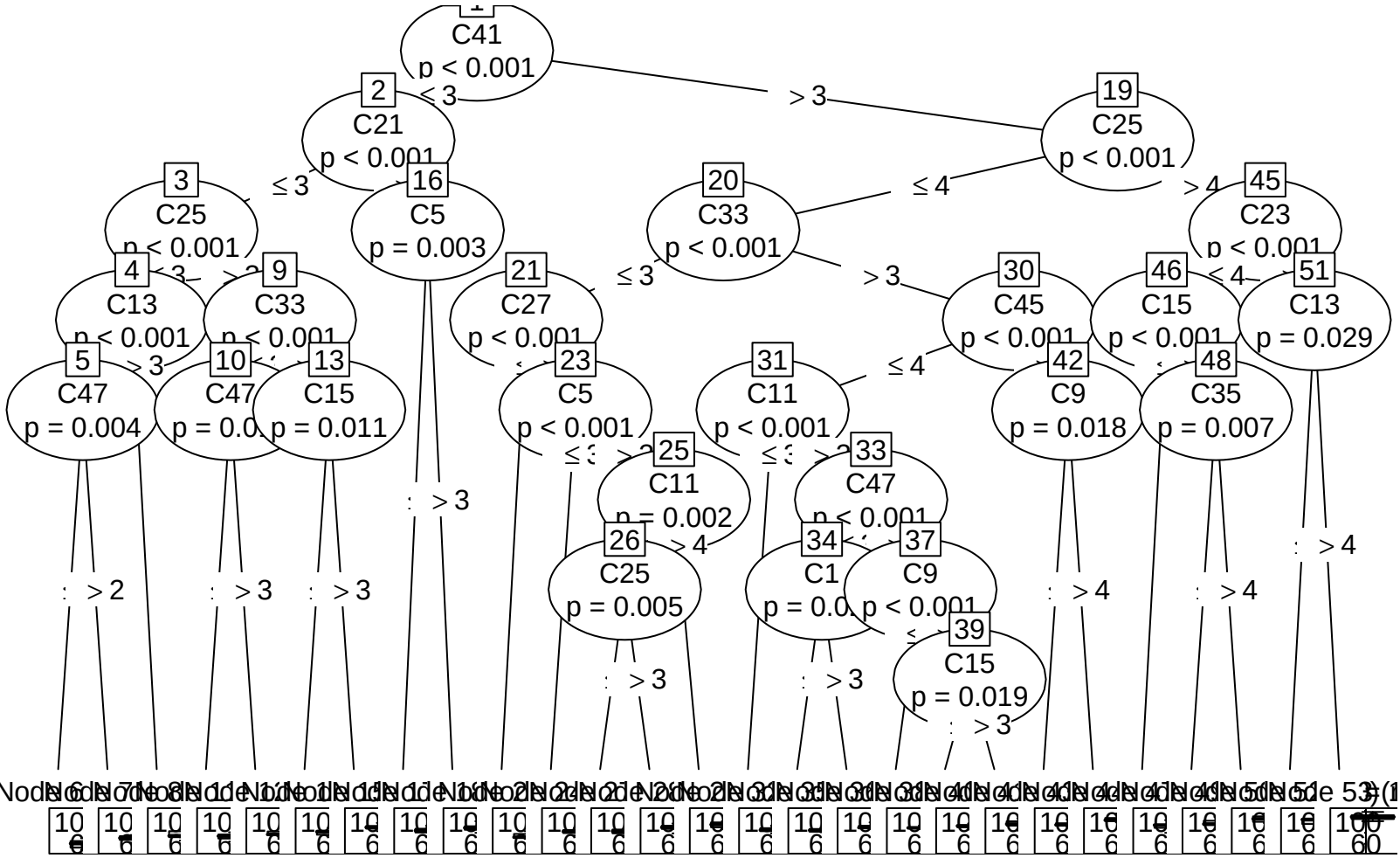
1
C41
p < 0.001
≤ 3
> 3
2
C21
p < 0.001
19
C25
p < 0.001
≤ 3
16
C5
p = 0.003
20
C33
p < 0.001
≤ 4
> 4
45
C23
p < 0.001
3
C25
p < 0.001
4
C13
p < 0.001
9
C33
p < 0.001
21
C27
p < 0.001
≤ 3
> 3
30
C45
p < 0.001
46
C15
p < 0.001
51
C13
p = 0.029
5
C47
p = 0.004
10
C47
p = 0.0
13
C15
p = 0.011
23
C5
p < 0.001
31
C11
p < 0.001
≤ 4
42
C9
p = 0.018
48
C35
p = 0.007
25
C11
p = 0.002
33
C47
p < 0.001
26
C25
p = 0.005
34
C1
p = 0.0
37
C9
p < 0.001
39
C15
p = 0.019
> 2
> 3
> 4