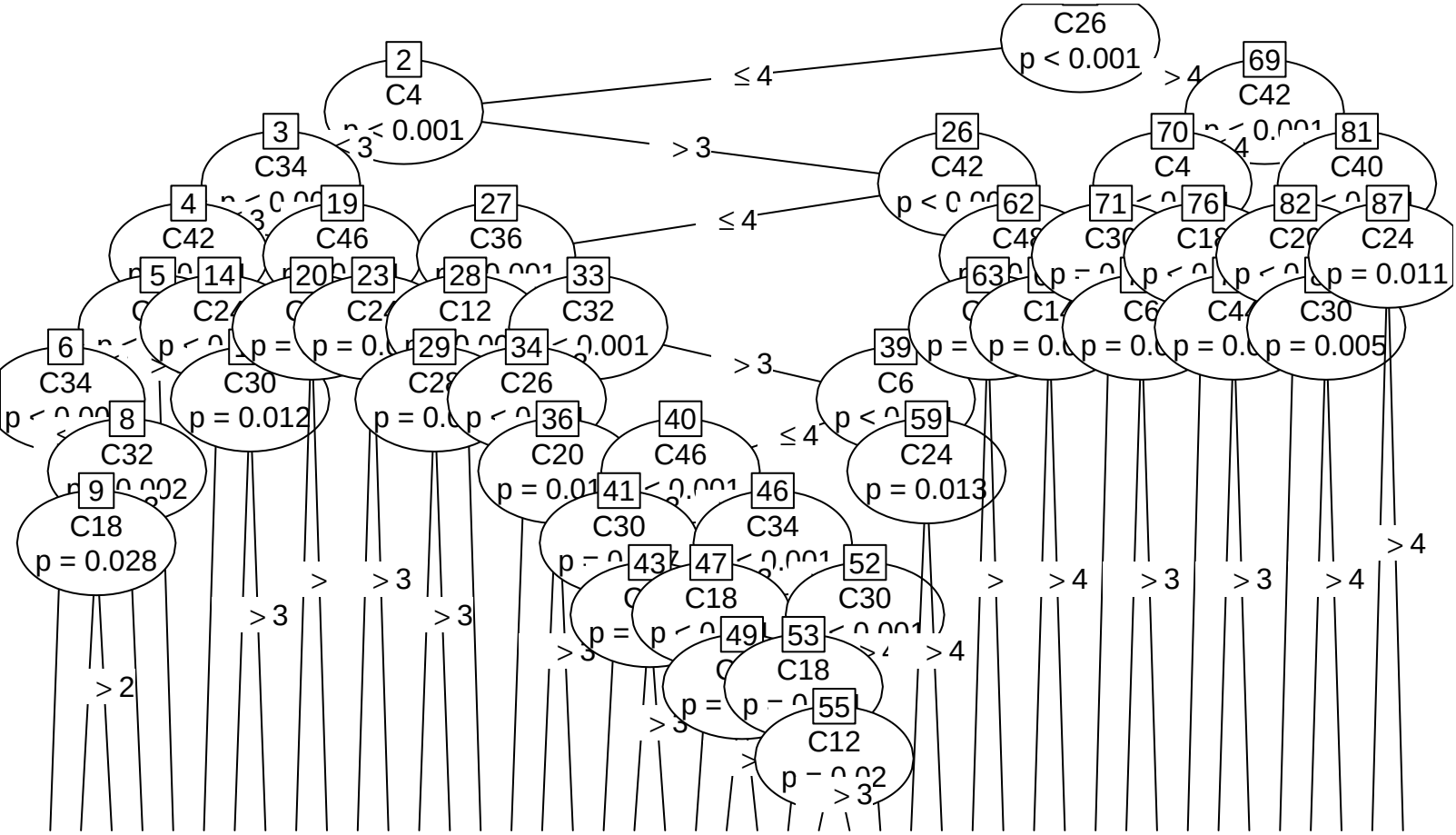
C26
p < 0.001
≤ 4
> 4
2
C4
p < 0.001
69
C42
> 3
3
C34
26
C42
70
C4
81
C40
4
C42
19
C46
27
C36
≤ 4
62
71
76
82
87
C24
p = 0.011
5
14
20
23
28
33
63
6
C34
C30
p = 0.012
29
34
39
C6
p < 0.001
> 3
8
C32
36
C20
40
C46
59
C24
p = 0.013
≤ 4
9
C18
p = 0.028
41
C30
46
C34
43
47
C18
52
C30
49
53
C18
55
C12
> 2
> 3
> 4