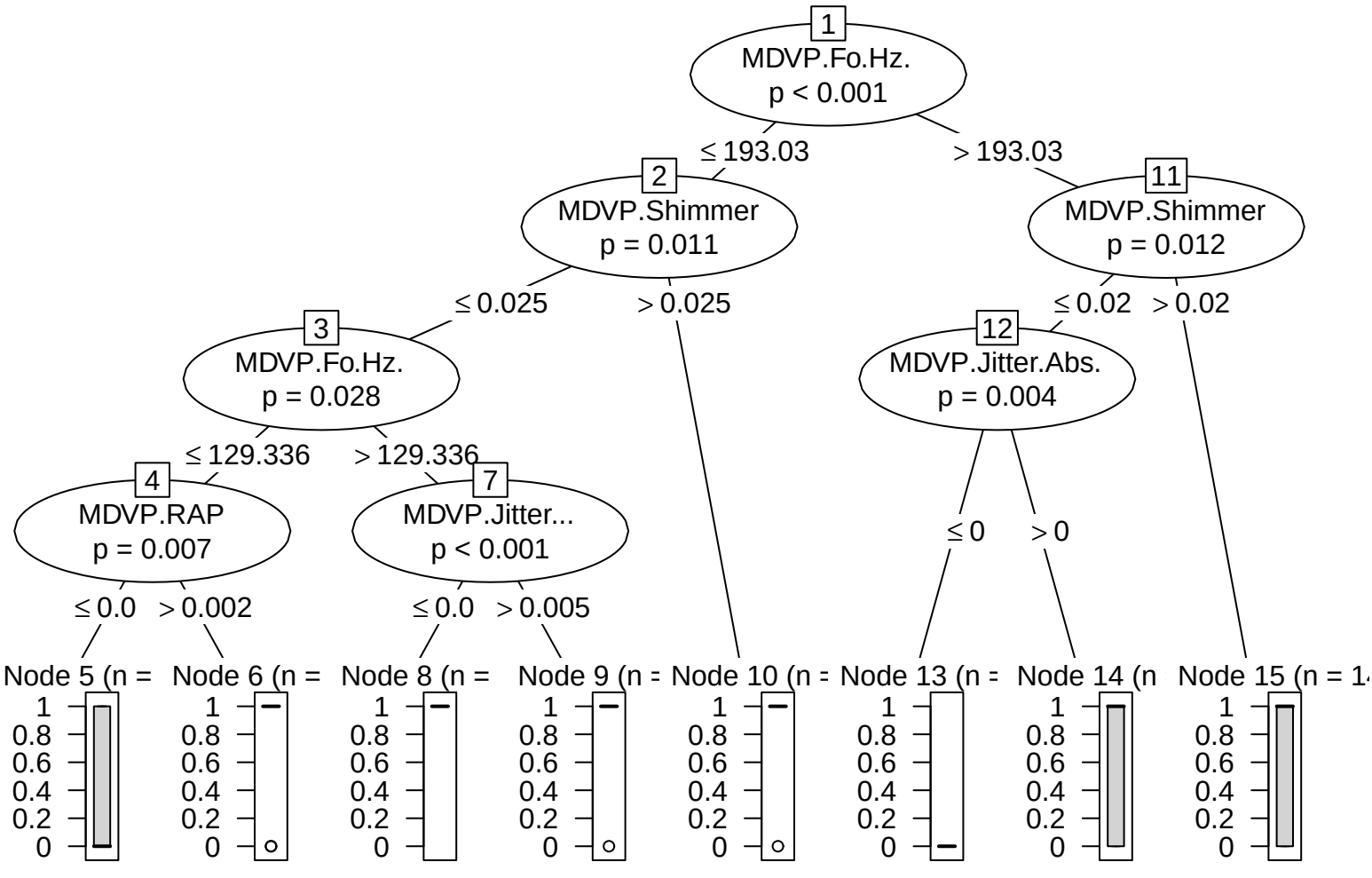
1
MDVP.Fo.Hz.
p < 0.001
≤ 193.03
> 193.03
2
MDVP.Shimmer
p = 0.011
11
MDVP.Shimmer
p = 0.012
≤ 0.025
> 0.025
≤ 0.02
> 0.02
3
MDVP.Fo.Hz.
p = 0.028
12
MDVP.Jitter.Abs.
p = 0.004
≤ 129.336
> 129.336
4
MDVP.RAP
p = 0.007
7
MDVP.Jitter...
p < 0.001
≤ 0
> 0
≤ 0.0
> 0.002
≤ 0.0
> 0.005
Node 5 (n =
Node 6 (n =
Node 8 (n =
Node 9 (n =
Node 10 (n =
Node 13 (n =
Node 14 (n
Node 15 (n = 1
1
0.8
0.6
0.4
0.2
0